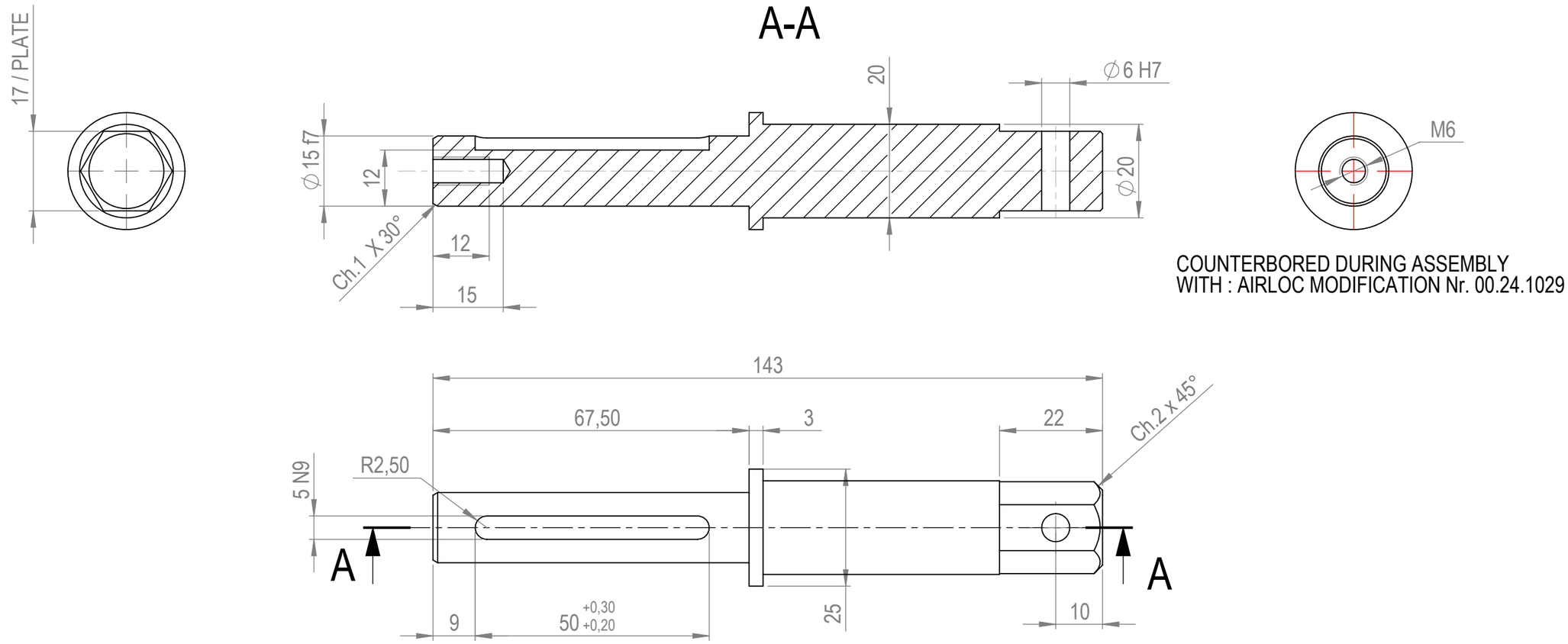

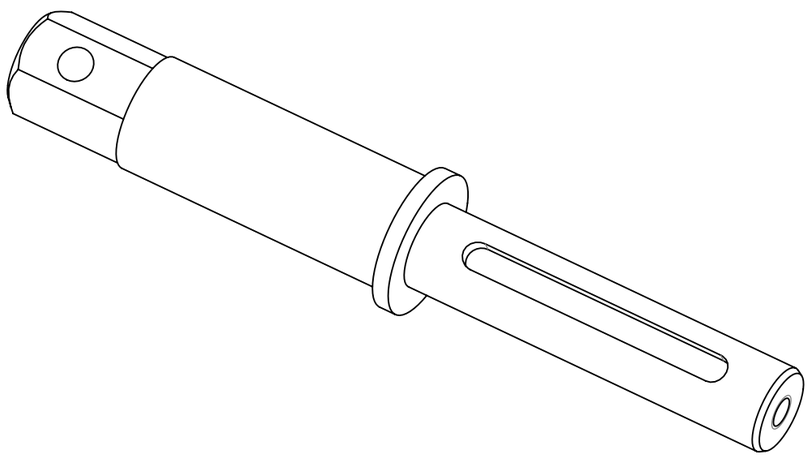

REMOVE ALL BURRS AND SHARP EDGES

ITEM	DRAWING N.	QTY	DESCRIPTION / REMARKS	X20Cr13 MATERIAL	0.2626 W./Kg

SCALE:1:1 1/ 1 (0 mm – 100)

	NAME	DATE
DRN.	HEYMAN	27/08/2019
CKD.	CASTRO	
APPD.	.	

BM25 MONO-1/MONO-2 ASSY
CONCRETE BLOCK ASSY
DRIVE SHAFT

ISO STANDARD
GEN. SURFACE FINISH : N7
GEN. LINEAR TOL. : Js12
GEN. ANGULAR TOL. : ±0,5°

A3

Spanish CRG Beamline
AT EUROPEAN SYNCHROTRON
BP 220 38043 GRENOBLE CEDEX-FRANCE
Comisión Interministerial de Ciencia y Tecnología CICYT
Cl. Rosario Pino 14-16 28020 MADRID - ESPAÑA

ASSY. 57.26.1006

57.26.1025

MOD	DATE	DRND.	APPD.	DESCRIPTION

SPLINE

SolidWorks