MONO-1 ASSY

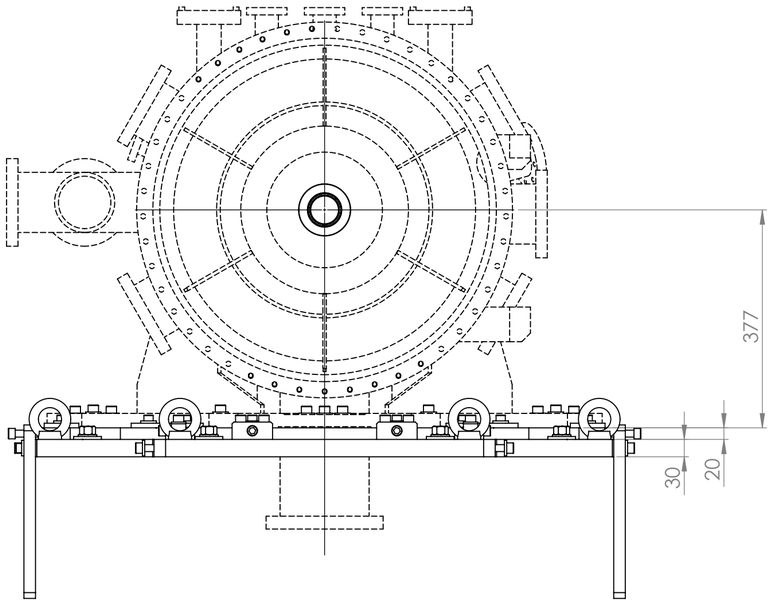

MONO-2 ASSY

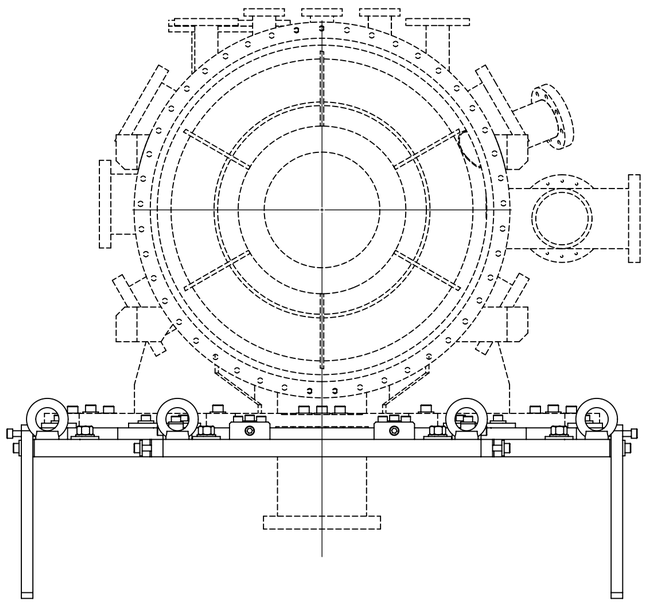

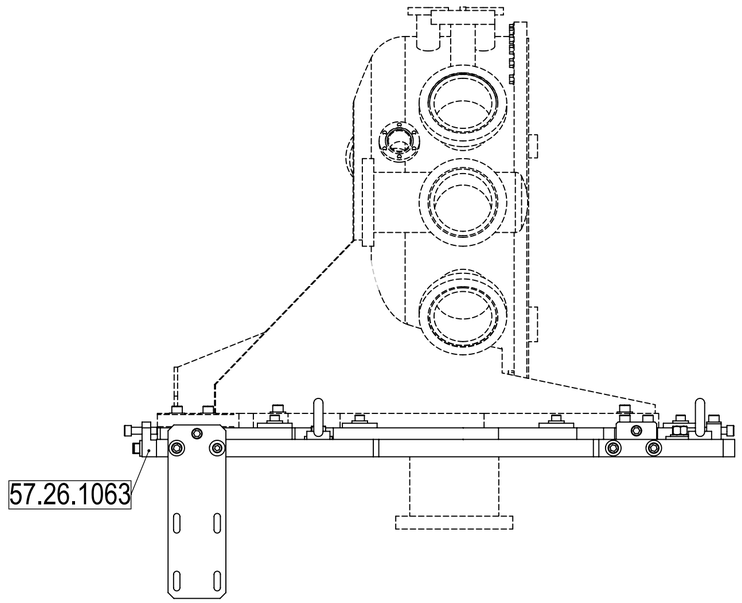

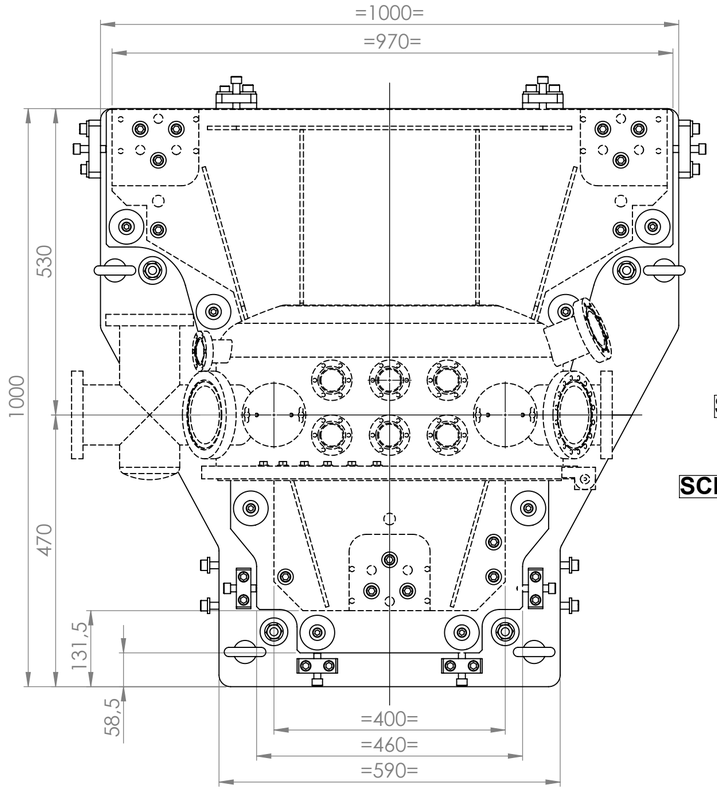

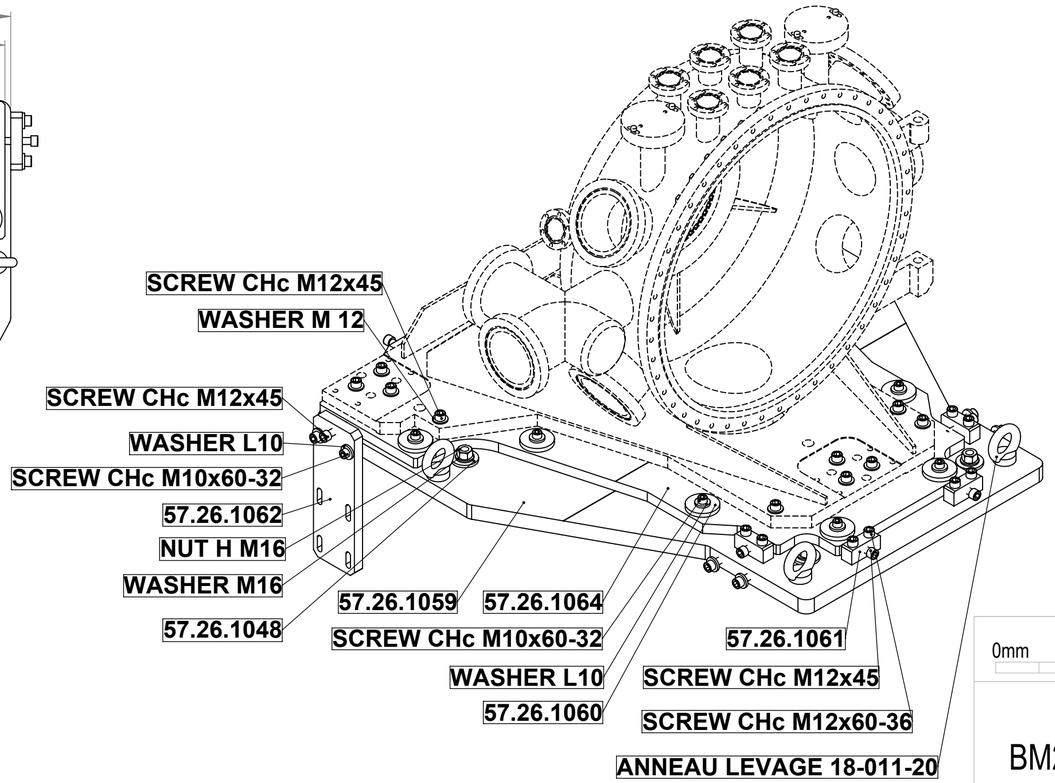

	14	SCREW CHc M12x45	A4-70	
	4	SCREW CHc M10x50-32	A4-70	
	8	SCREW CHc M10x45-32	A4-70	
	24	SCREW CHc M10x60-32	A4-70	
	14	WASHER M 12	A4_70	
	20	WASHER L10	ST.STEEL	0,0136
	4	WASHER M16	ST.STEEL	0,0121
	4	NUT H M16	ST.STEEL	0,0354
	4	ANNEAU LEVAGE 18-011-20		
57.26.1064	1	BASE MONO PLATE	AW-7075	33.
57.26.1063	2	ADGUSTING REAR BLOCK	AW-7075	0.21
57.26.1062	2	ADGUSTING PLATE	AW-7075	1.6
57.26.1061	4	ADGUSTING TOP BLOCK	AW-7075	0.13
57.26.1060	8	SPECIAL WASHER M10	INOX	0.11
57.26.1059	1	SUPPORT PLATE	AW-7075	65.8
57.26.1048	4	THICKNESS WASHER	X2CrNiMo19-11(304L)	0.0625
DRAWING N.	QTY	DESCRIPTION / REMARKS	MATERIAL	W./Kg

SCALE:1:7.5

0mm 100

	NAME	DATE
DRN.	HEYMAN	02/09/2019
CKD.		
APPD.		

BM25 UPGRADE
BM25 MONO-1/MONO-2 ASSY
MONO1/MONO2 HOLDER

ISO STANDARD
GEN. SURFACE FINISH :
GEN. LINEAR TOL. :
GEN. ANGULAR TOL. :

A2

SpLine **Spanish CRG Beamline**
AT EUROPEAN SYNCHROTRON
BP 220 38043 GRENOBLE CEDEX-FRANCE
Comisión Interministerial de Ciencia y Tecnología CICYT
Cl. Rosario Pino 14-16 28020 MADRID - ESPAÑA

ASSY. 57.26.1000

57.26.1004

MOD	DATE	DRND.	APPD.	DESCRIPTION

ESRF

SolidWorks