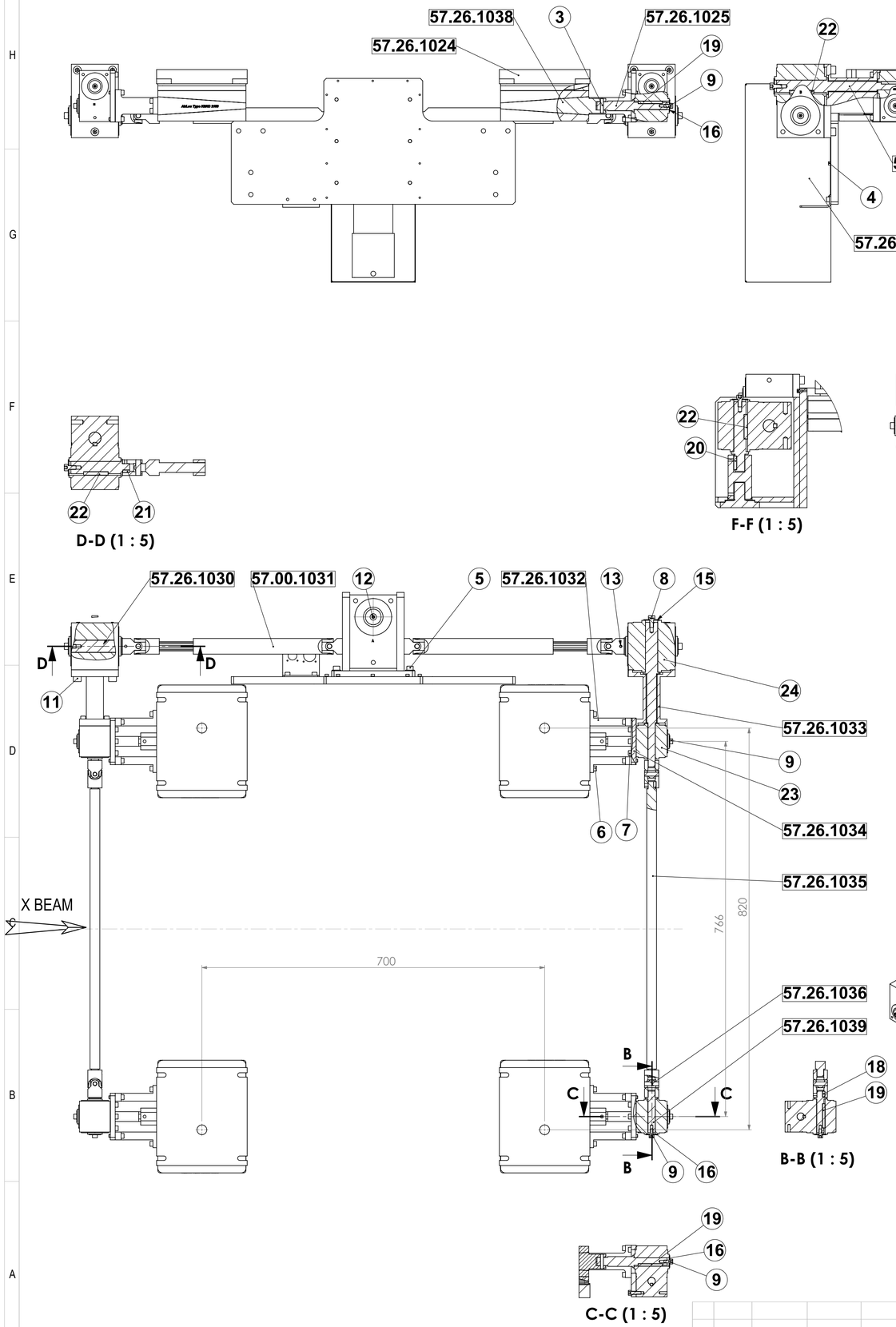

REP	DRW N.	QTY	DESCRIPTION / REMARKS	MATERIAL	W./Kg
26		1	REDUCTOR GEAR BOX MOTOR SM 87.1.18 M3 PE40	ZEBOTRONICS	
25		1	ANGLE GEAR BOX E60-10	HPC	
24		2	ANGLE GEAR BOX REF . E60-1	HPC	0,
23		4	ANGLE GEAR BOX E40-1		
22		4	KEY REF KK8-7-50	HPC	0,
21		4	KEY REF KK5-14	HPC	0,
20		1	KEY KK6-28	HPC	
19		8	KEY REF. KK5-50	HPC	0,
18		8	KEY REF KK5-12	HPC	0,
17		2	CIRCLIPS OD25	ST.STEEL	0,0026
16		6	WASHER LL6	ST. STEEL	0.004
15		4	WASHER LL8	ST. STEEL	0.0089
14		6	WASHER M8	ST. STEEL	0.0024
13		8	SCREW Hc M6x8	A4-70	0.002
12		14	SCREW CHC M6x16	A4-70	0.0074
11		6	SCREW CHC M10x30	A4-70	0,0275
10		6	SCREW CHC M10 x 20	A4-70	0.0249
9		12	SCREW CHC M6x12	A4-70	0,005
8		4	SCREW CHC M8 x 16	A4-70	0.0132
7		12	SCREW CHC M6-20	A4-70	0,0065
6		6	SCREW CHC M6-25	HPC	0,0075
5		6	SCREW CHC M8-25	A4-70	0,0149
4		11	SCREW CHC M4 x 8	A4-70	0.0018
3		4	CYLINDRICAL PIN A6 X 30	ST. STEEL	0.0065
	57.26.1041	1	COUPLING		0.139
	57.26.1040	1	LITTLE DRIVE PIN 3	X20Cr13	0.4981
	57.26.1039	2	LITTLE DRIVE PIN 2	X20Cr13	0.1144
	57.26.1038	4	AIRLOC KSKC 2150 MODIFICATION	AIRLOC	6.597
	57.26.1037	1	MOTOR SUPPORT	AW-2017 A	1.6419
	57.26.1036	4	GIMBAL JOINT	STAINLESS STEEL	0.1709
	57.26.1035	2	BIG DRIVE SHAFT	X20Cr13	1.4533
	57.26.1034	4	GEAR BOX SUPPORT	AW-2017 A	0.2229
	57.26.1033	2	ANGLE GEAR BOX SUPPORT	AW-7075	1.1741
	57.26.1032	8	GEAR BOX SPACER	AW-2017 A	0.1671
	57.26.1031	2	SLIDING GIMBAL JOINT	PRUD'HOMME	0.9527
	57.26.1030	2	LITTLE DRIVE PIN 1	X20Cr13	0.4227
	57.26.1029	1	GEAR BOX DRIVE SHAFT	X20Cr13	0.4632
	57.26.1028	1	MOTOR SUPPORT PLATE	AW-2017 A	4.827
	57.26.1027	2	BIG DRIVE PIN	X20Cr13	0.7651
	57.26.1026	1	GUARD	Z6Cn18-09	2.136
	57.26.1025	4	DRIVE SHAFT	X20Cr13	0.2626
	57.26.1024	4	MARBLE INFERIOR INTERFACE	S 355 JR	7.5811
	57.26.1023	1	CONNECTOR SUPPORT	AW-2017 A	0.0309

SCALE: 1/ 1

0mm 100

	NAME	DATE
DRN.	HEYMAN	27/08/2019
CKD.	CASTRO	
APPD.		

BM25 MONO-1/MONO-2 ASSY
CONCRETE BLOCK ASSY
GEAR BOX TRANSMISSION

ISO STANDARD
GEN. SURFACE FINISH :
GEN. LINEAR TOL. :
GEN. ANGULAR TOL. :

A1

Spanish CRG Beamline
AT EUROPEAN SYNCHROTRON
BP 220 38043 GRENOBLE CEDEX-FRANCE
Comisión Interministerial de Ciencia y Tecnología CICYT
Ct. Rosario Pino 14-16 28020 MADRID - ESPAÑA

ASSY. 57.26.1001

57.26.1006

MOD	DATE	DRND.	APPD.	DESCRIPTION	MOD	DATE	DRND.	APPD.	DESCRIPTION

SPLINE

SolidWorks