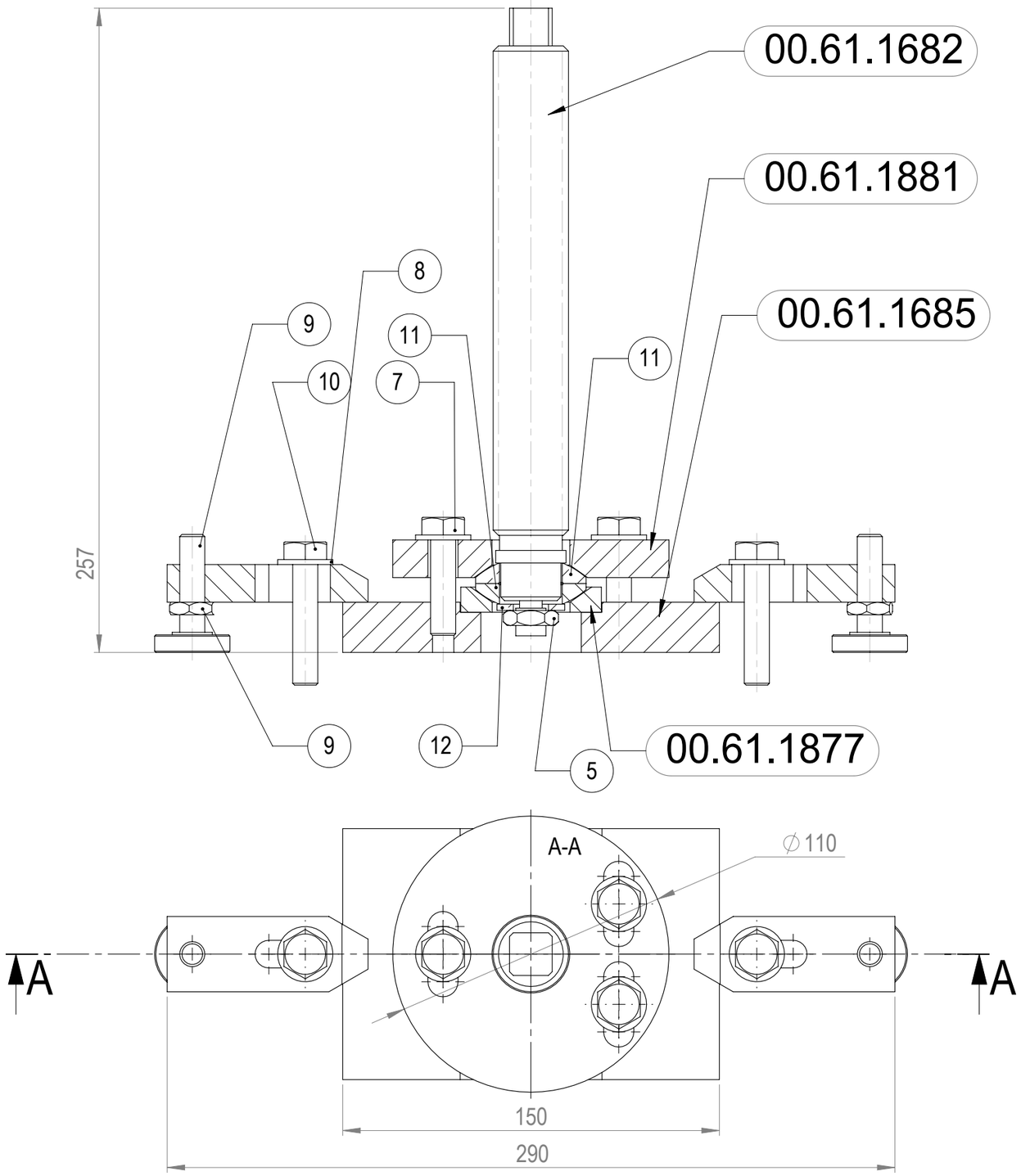

ITEM	DRAWING N.	QTY	DESCRIPTION / REMARKS	MATERIAL	W./Kg
12		1	WASHER M 12	A2	
11		2	CONVEX WASHER 2340124	EMILE MAURIN	0
10		2	SCREW H M10x50-26	A4-70	
9		2	BRIDE ref 21140118080	EMILE MAURIN	0,0428
8		5	WASHER M 10	A2	
7		3	SCREW H M10x40-26	A4-70	
5		1	NUT Hm M 12	A4	
	00.61.1881	1	CLAMPING PLATE	C45E	0,8812
	00.61.1682	1	FOOT AXIS	C45E	1,2236
	00.61.1877	1	CONCAVE WASHER	AL-15Lox	0,1256
	00.61.1685	1	SOLE	E335	1,993

SCALE: 1/ 2

0 mm 200

	NAME	DATE
DRN.	JFRIBOIS	22/06/10
CKD.	ESRF	
APPD.		

BEAMLINE GENERAL
MEC. SUPPORT & ALIGNMENT
FOOT ASSY

ISO STANDARD
GEN. SURFACE FINISH :
GEN. LINEAR TOL. :
GEN. ANGULAR TOL. :

A3

EUROPEAN SYNCHROTRON RADIATION FACILITY
BP 220 38043 GRENOBLE CEDEX-FRANCE
TEL. 04-76-88-20-00 FAX 04-76-88-20-20

ASSY. 46.21.1038

00.61.1684

MOD	DATE	DRND.	APPD.	DESCRIPTION

ESRF

SolidWorks