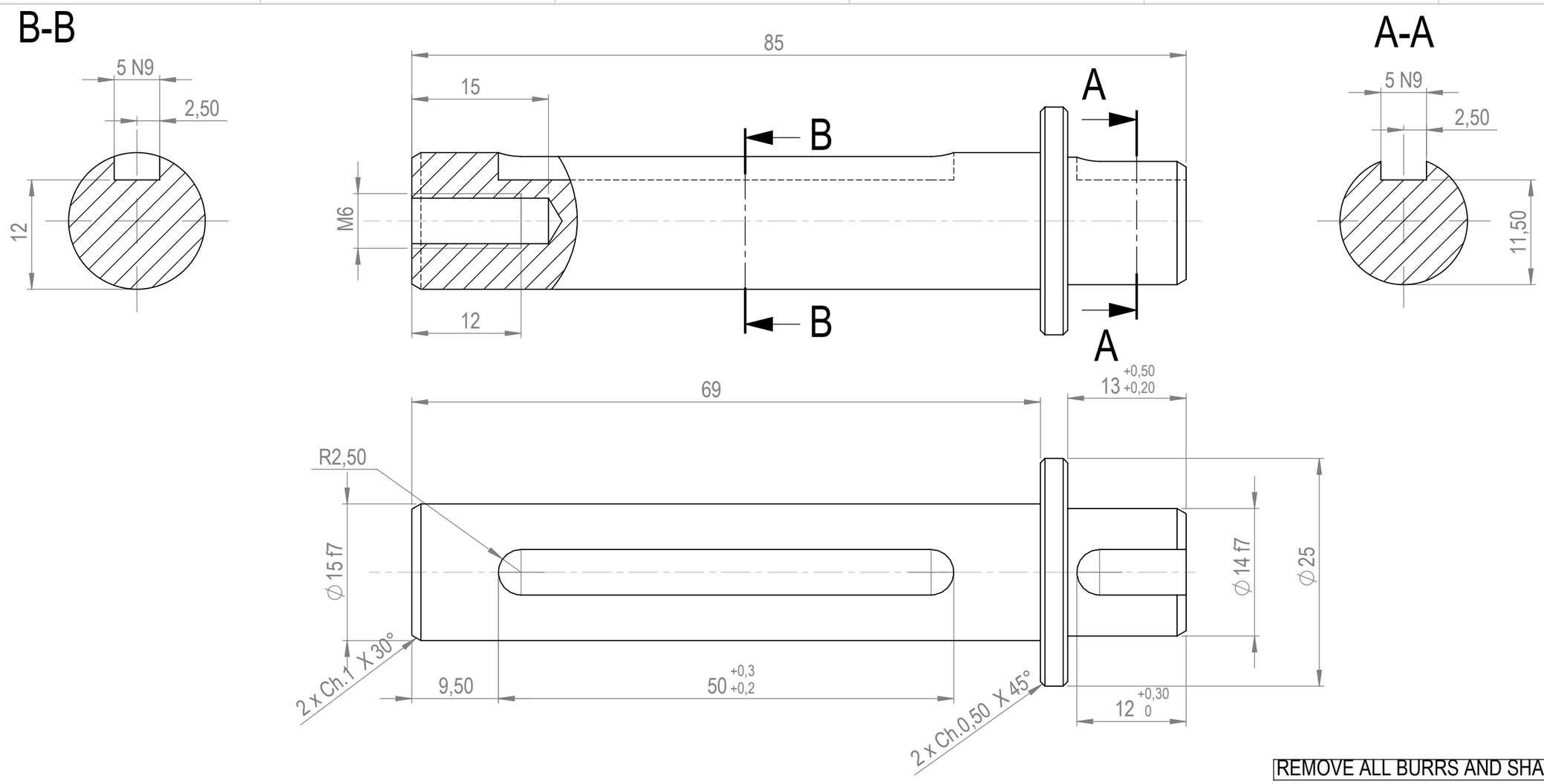

REMOVE ALL BURRS AND SHARP EDGES

SCALE 1/1

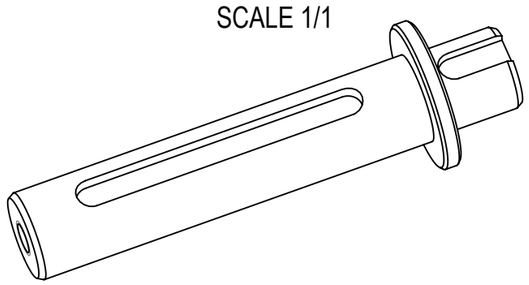

ITEM	DRAWING N.	QTY	DESCRIPTION / REMARKS	MATERIAL	W./Kg
				X20Cr13	0.1144

SCALE:2:1 (2/ 1) — 0 mm — 50

	NAME	DATE
DRN.	HEYMAN	30/08/2019
CKD.	CASTRO	
APPD.	.	

BM25 MONO-1/MONO-2 ASSY
GEAR BOX TRANSMISSION
LITTLE DRIVE PIN 2

ISO STANDARD

GEN. SURFACE FINISH	:	N7
GEN. LINEAR TOL.	:	Js12
GEN. ANGULAR TOL.	:	±0,5°

A3

Spanish CRG Beamline
AT EUROPEAN SYNCHROTRON
BP 220 38043 GRENOBLE CEDEX-FRANCE
Comisión Interministerial de Ciencia y Tecnología CICYT
Cl. Rosario Pino 14-16 28020 MADRID - ESPAÑA

ASSY. 57.26.1006

57.26.1039

MOD	DATE	DRND.	APPD.	DESCRIPTION

SPLINE

SolidWorks