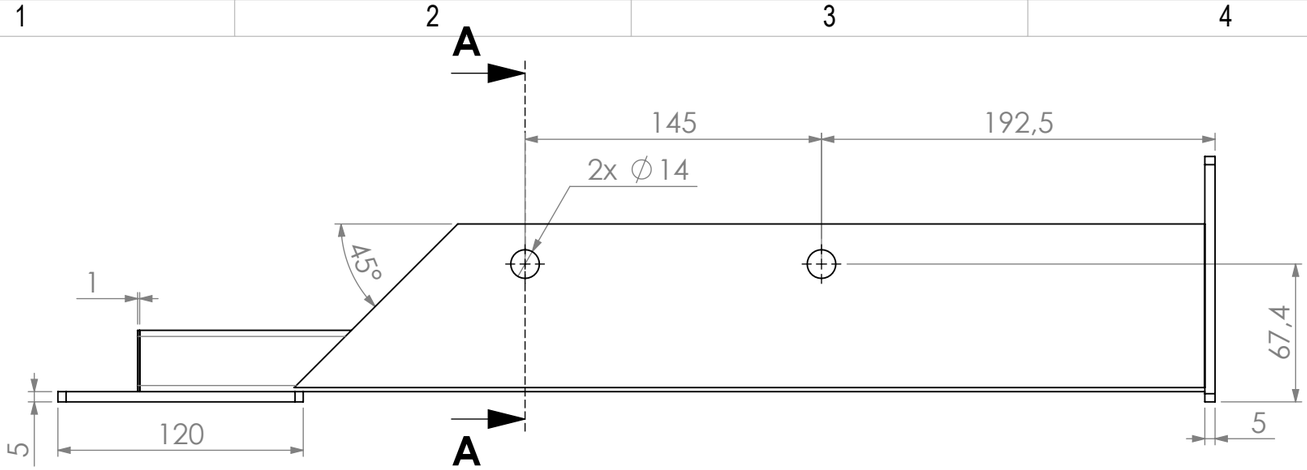

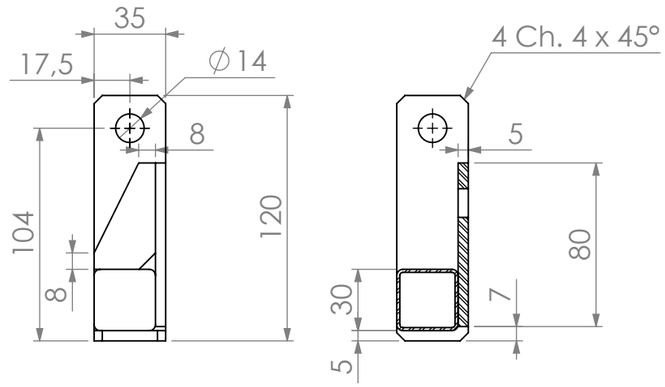

COUPE A-A

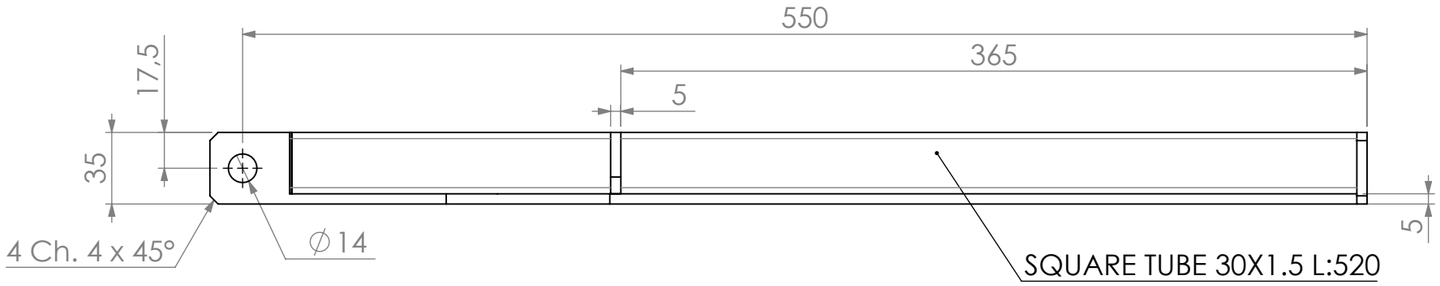

WELDING STANDARD TOLERANCES (NF E 86-050) : CLASS A
TOLERANCES GENERALES DE MECANO-SOUDURE (NF E 86-050) : CLASSE A

NOTA: SOUDURE D'ANGLE — SAUF INDICATION CONTRAIRE
FILLET WELD — UNLESS OTHER WRITTEN DIMENSION

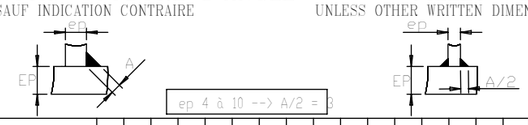

ep 4 à 10 --> A/2 = 3

"A"	1,5	2	3	3	4	4	5	5	5	6	6	6	6	6	6	6	6	6
EPAISSEUR TOLE "ep" STEEL PLATE THICKNESS	2	3	4	5	6	7	8	9	10	11	12	13	14	15	16	17	18	20

NOTES: 1. CUTTING OF MATERIAL : N8

2. GENERAL OF SURFACES FINISH: ∇
3. REMOVE ALL BURRS AND SHARP EDGES
4. WELDING: 2◺ EXCEPT INDICATIONS
5. PAINTING: - ONE COAT OF PRIMER
- TWO COATS OF PAINT RAL 1018 EXCEPT ON MACHINED SURFACES.

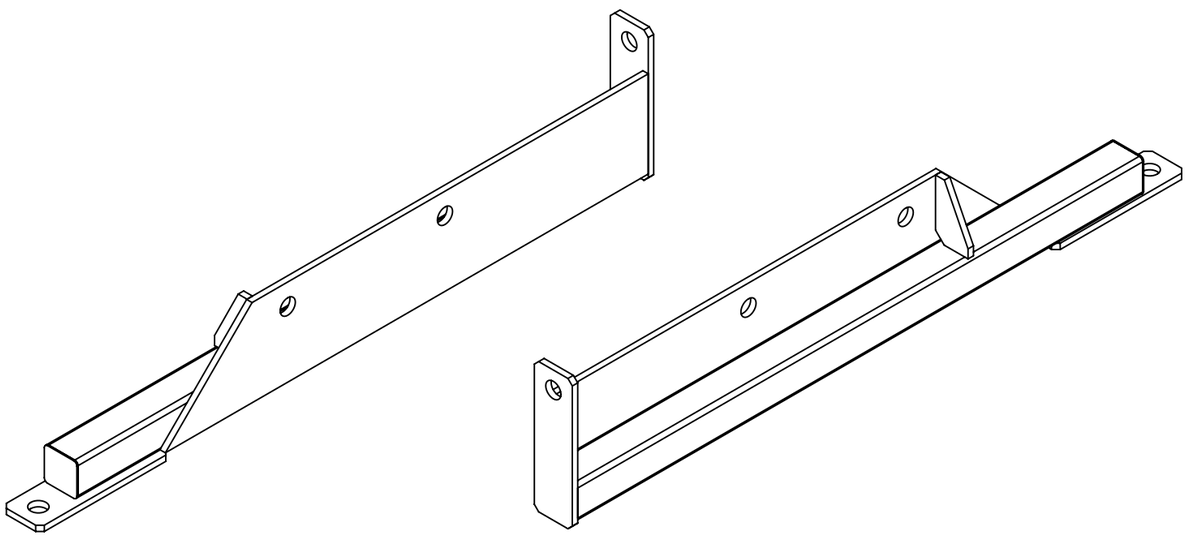

ITEM	DRAWING N.	QTY	DESCRIPTION / REMARKS	MATERIAL (S235 JR)	W./Kg (2.2)

SCALE:1:3 (0 mm – 100)

	NAME	DATE
DRN.	HEYMAN	30/08/2019
CKD.	CASTRO	
APPD.		

BM25 MONO-1/MONO-2 ASSY
CONCRETE BLOCK ASSY
PUMP HOLDER LEFT

ISO STANDARD
GEN. SURFACE FINISH : N8
GEN. LINEAR TOL. : Js12
GEN. ANGULAR TOL. : ±0,5°

A3

Spanish CRG Beamline
AT EUROPEAN SYNCHROTRON
BP 220 38043 GRENOBLE CEDEX-FRANCE
Comisión Interministerial de Ciencia y Tecnología CICYT
Cl. Rosario Pino 14-16 28020 MADRID - ESPAÑA

ASSY. 57.26.1001

57.26.1011

MOD	DATE	DRND.	APPD.	DESCRIPTION

SPLINE

SolidWorks