MOD	DATE	DRND.	APPD.	DESCRIPTION

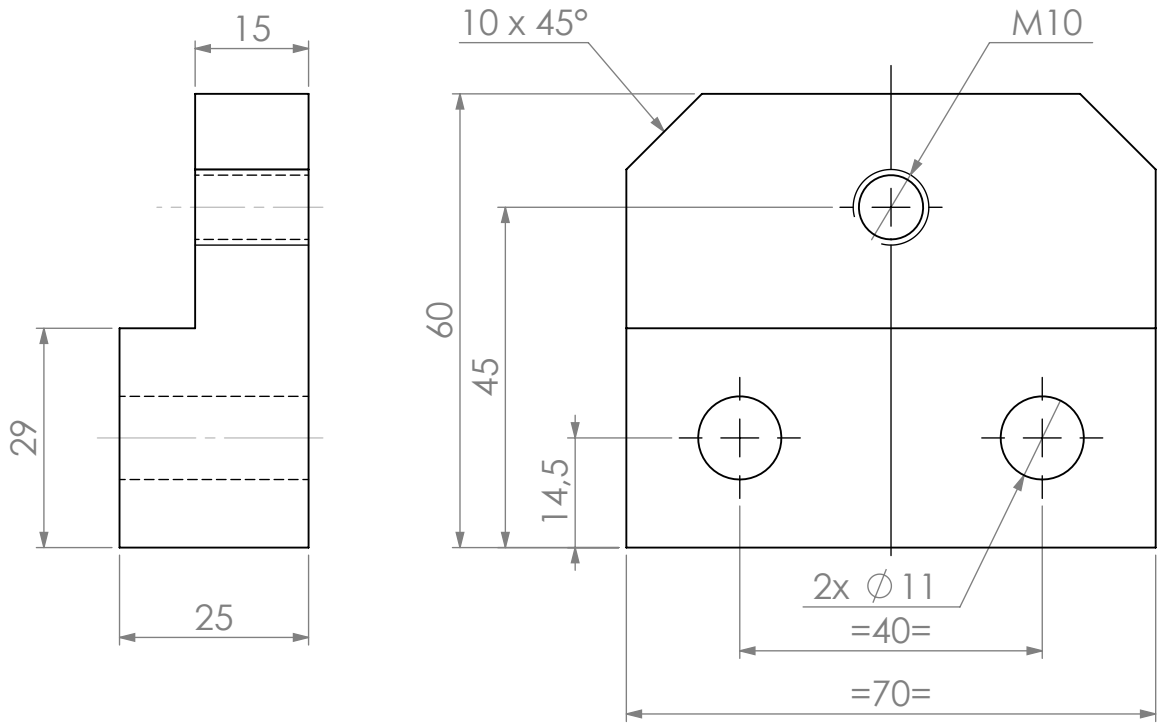

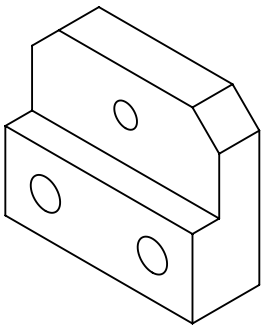

REMOVE ALL BURRS AND SHARP EDGES.

ITEM	DRAWING N.	QTY	DESCRIPTION / REMARKS	MATERIAL	W./Kg
				AW-7075	0.21

SCALE:1:1

0mm 250

	NAME	DATE
DRN.	HEYMAN	02/09/2019
CKD.	CASTRO	
APPD.		

BM25 MONO-1/MONO-2 ASSY
MONO1/MONO2 HOLDER
ADGUSTING REAR BLOCK

ISO STANDARD

GEN. SURFACE FINISH : N8

GEN. TOL. : :

A4

Spanish CRG Beamline
AT EUROPEAN SYNCHROTRON
BP 220 38043 GRENOBLE CEDEX-FRANCE
Comisión Interministerial de Ciencia y Tecnología CICYT
Cl. Rosario Pino 14-16 28020 MADRID - ESPAÑA

ASSY. 57.26.1004

57.26.1063

SolidWorks