MOD	DATE	DRND.	APPD.	DESCRIPTION

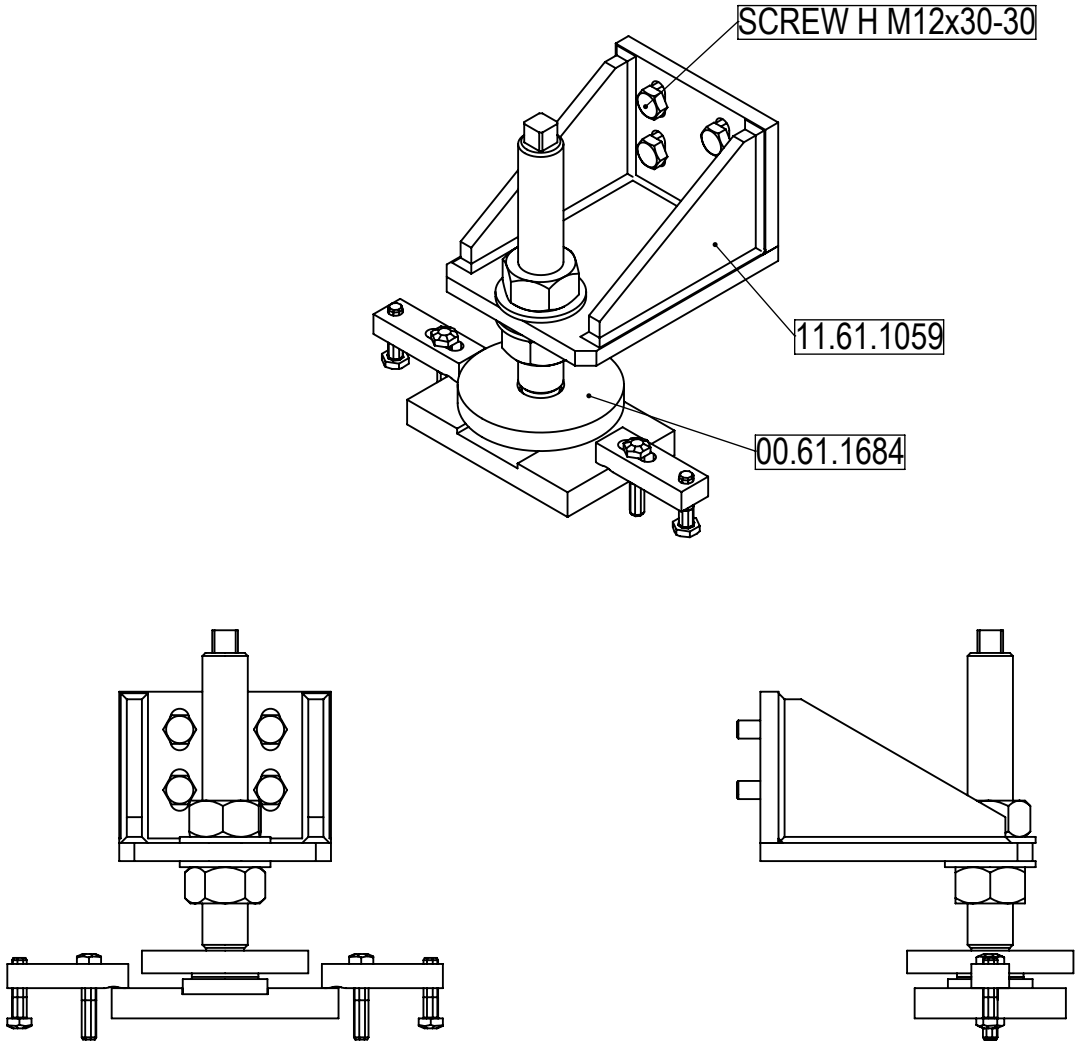

ITEM	DRAWING N.	QTY	DESCRIPTION / REMARKS	MATERIAL	W./Kg
3		4	SCREW H M12x30-30	A4-70	
	11.61.1059	1	FOOT HOLDER	S235JR(E24-2)	4.971
	00.61.1684	1	SLIDING FOOT M30		

SCALE:1:5

0mm 500

	NAME	DATE
DRN.	HEYMAN	20/08/2019
CKD.		
APPD.		

BM25 MONO-1 MONO-2 ASSY
GRANIT ASSY
GRANIT FOOT

ISO STANDARD

GEN. SURFACE FINISH :

GEN. TOL. : :

A4

Spanish CRG Beamline
AT EUROPEAN SYNCHROTRON
BP 220 38043 GRENOBLE CEDEX-FRANCE
Comisión Interministerial de Ciencia y Tecnología CICYT
Cl. Rosario Pino 14-16 28020 MADRID - ESPAÑA

ASSY. 57.26.1001

57.26.1009

SolidWorks