MOD	DATE	DRND.	APPD.	DESCRIPTION

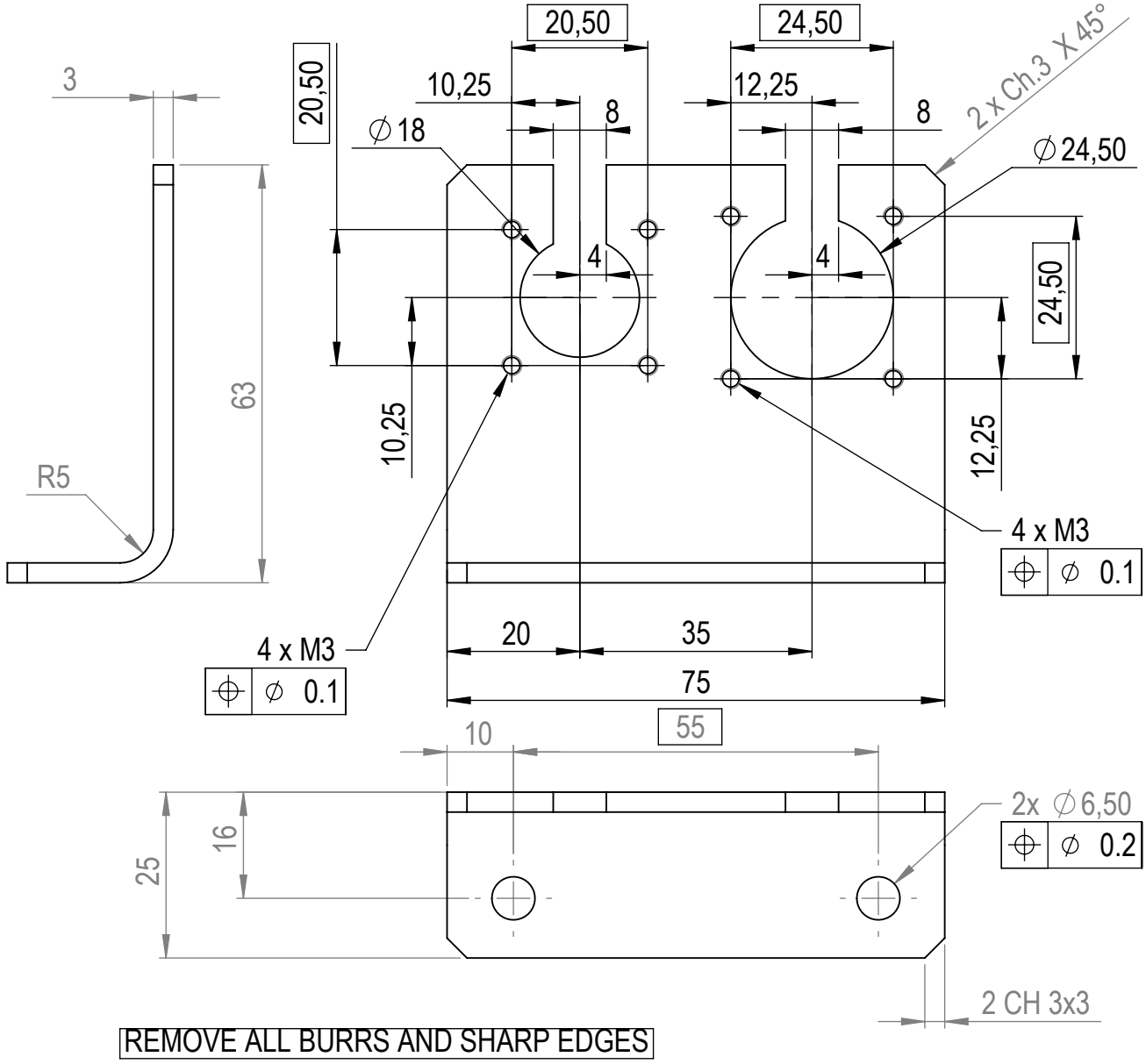

REMOVE ALL BURRS AND SHARP EDGES

ITEM	DRAWING N.	QTY	DESCRIPTION / REMARKS	MATERIAL	W./Kg
				AW-2017 A	0,0309

SCALE:1:1

0mm 100

	NAME	DATE
DRN.	HEYMAN	26/082019
CKD.	CASTRO	
APPD.		

BM25 MONO-1/MONO-2 ASSY GEAR BOX TRANSMISSION CONNECTOR SUPPORT

ISO STANDARD

GEN. SURFACE FINISH : N7

GEN. TOL. : ISO2768 m K :

A4

Spanish CRG Beamline

AT EUROPEAN SYNCHROTRON
BP 220 38043 GRENOBLE CEDEX-FRANCE
Comisión Interministerial de Ciencia y Tecnología CICYT
Cl. Rosario Pino 14-16 28020 MADRID - ESPAÑA

ASSY. 57.26.1006

57.26.1023

SPLINE

SolidWorks