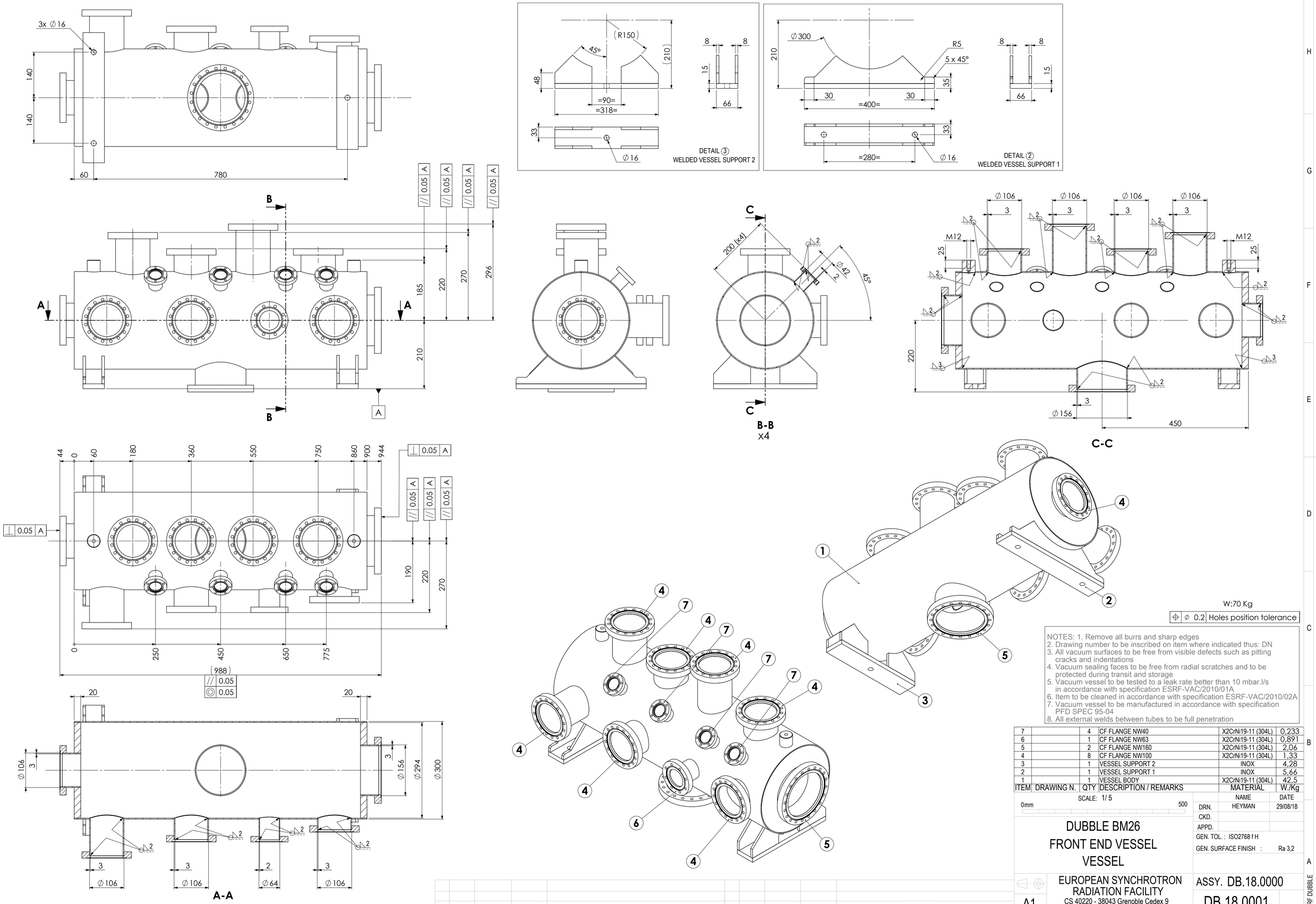

W:70 Kg

⌖	∅ 0.2	Holes position tolerance

NOTES:
1. Remove all burrs and sharp edges
2. Drawing number to be inscribed on item where indicated thus: DN
3. All vacuum surfaces to be free from visible defects such as pitting cracks and indentations
4. Vacuum sealing faces to be free from radial scratches and to be protected during transit and storage
5. Vacuum vessel to be tested to a leak rate better than 10 mbar.l/s in accordance with specification ESRF-VAC/2010/01A
6. Item to be cleaned in accordance with specification ESRF-VAC/2010/02A
7. Vacuum vessel to be manufactured in accordance with specification PFD SPEC 95-04
8. All external welds between tubes to be full penetration

ITEM	DRAWING N.	QTY	DESCRIPTION / REMARKS	MATERIAL	W./Kg
7		4	CF FLANGE NW40	X2CrNi19-11 (304L)	0,233
6		1	CF FLANGE NW63	X2CrNi19-11 (304L)	0,891
5		2	CF FLANGE NW160	X2CrNi19-11 (304L)	2,06
4		8	CF FLANGE NW100	X2CrNi19-11 (304L)	1,33
3		1	VESSEL SUPPORT 2	INOX	4,28
2		1	VESSEL SUPPORT 1	INOX	5,66
1		1	VESSEL BODY	X2CrNi19-11 (304L)	42,5

SCALE: 1/ 5

0mm 500

	NAME	DATE
DRN.	HEYMAN	29/08/18
CKD.		
APPD.		

GEN. TOL. : ISO2768 f H

GEN. SURFACE FINISH : Ra 3,2

DUBBLE BM26
FRONT END VESSEL
VESSEL

EUROPEAN SYNCHROTRON RADIATION FACILITY
CS 40220 - 38043 Grenoble Cedex 9
TEL. 04-76-88-20-00 WWW.ESRF.FR

A1

ASSY. DB.18.0000

DB.18.0001

ESRF DUBBLE

SolidWorks

MOD	DATE	DRND.	APPD.	DESCRIPTION	MOD	DATE	DRND.	APPD.	DESCRIPTION