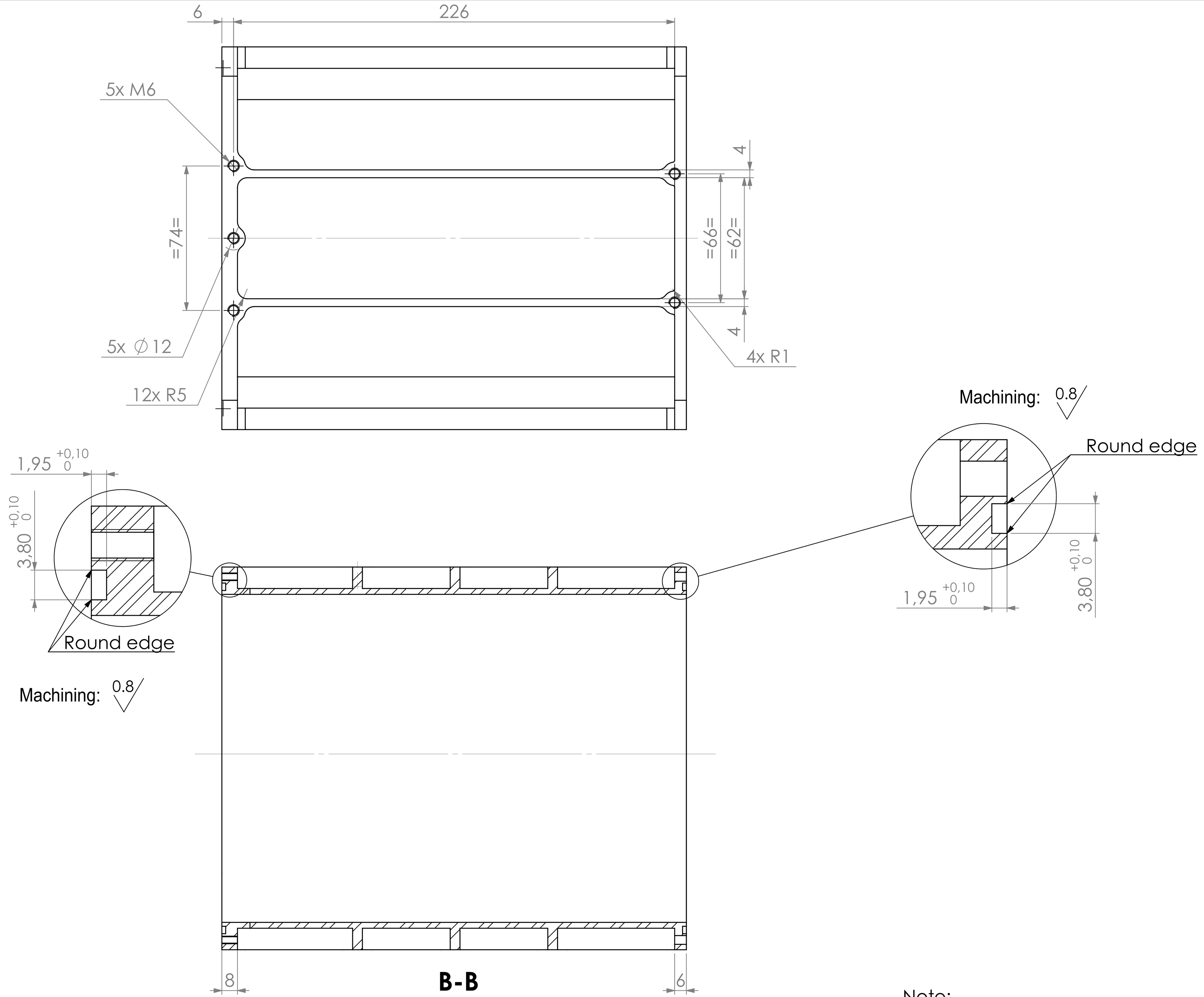

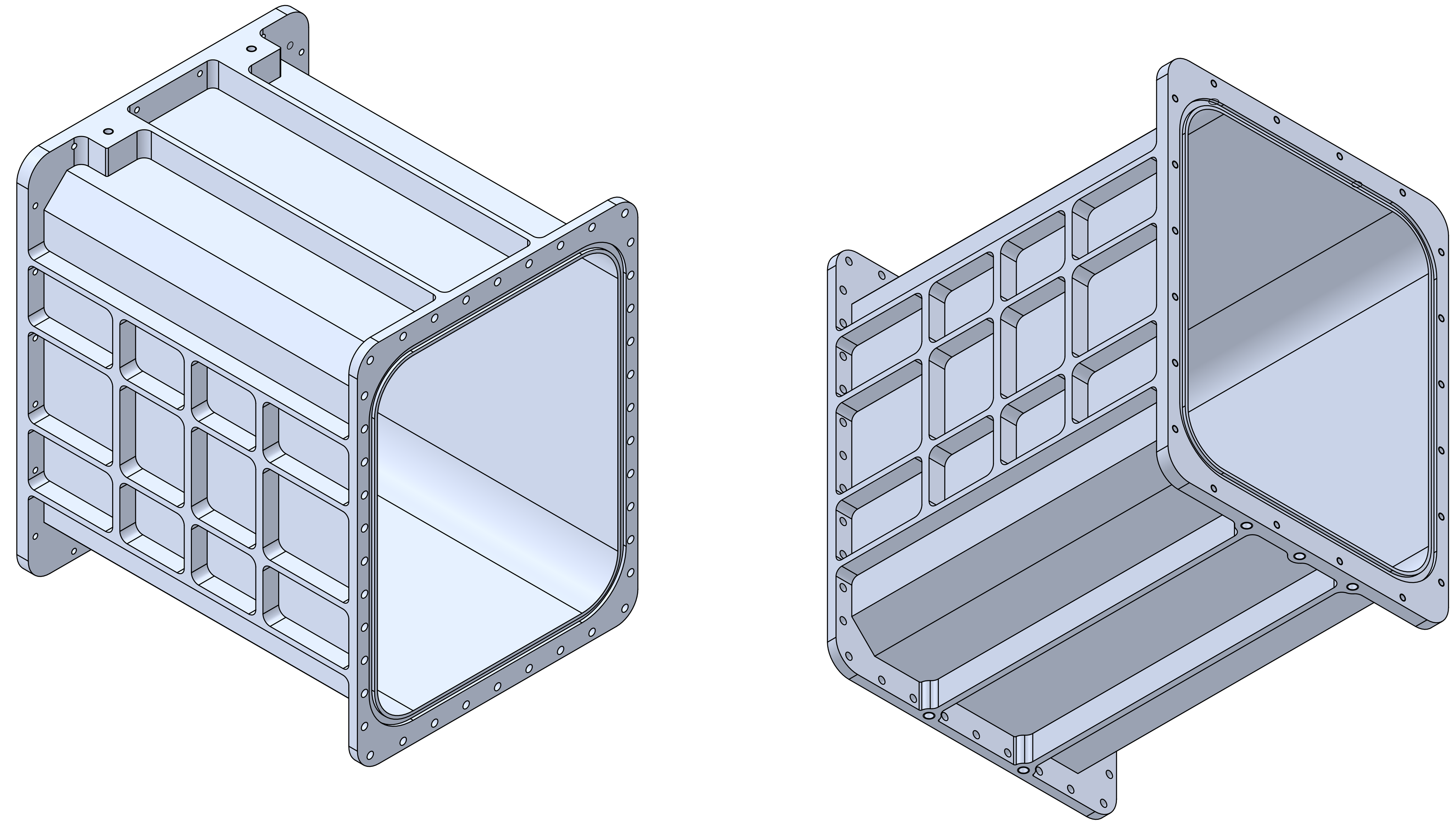

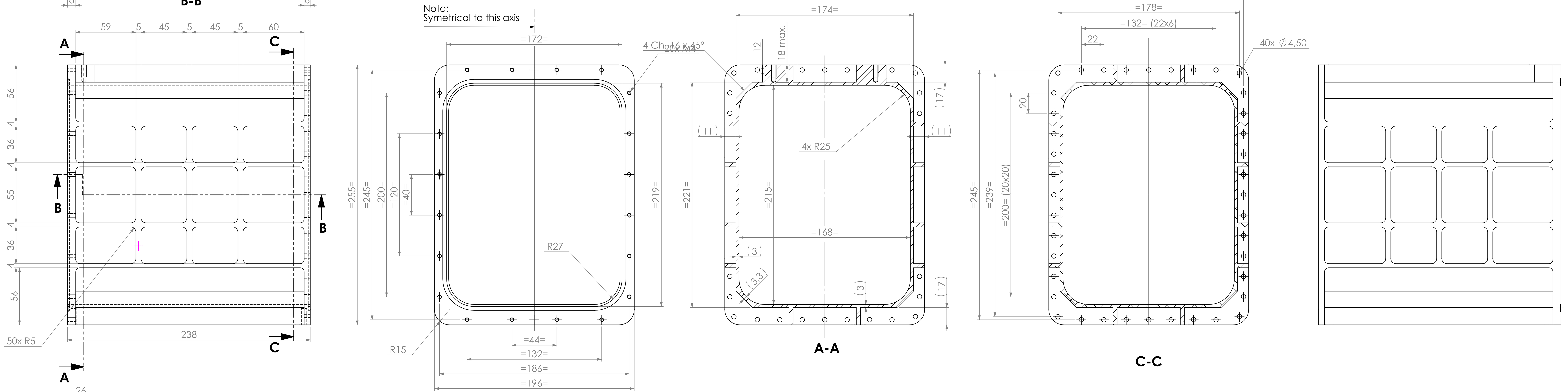

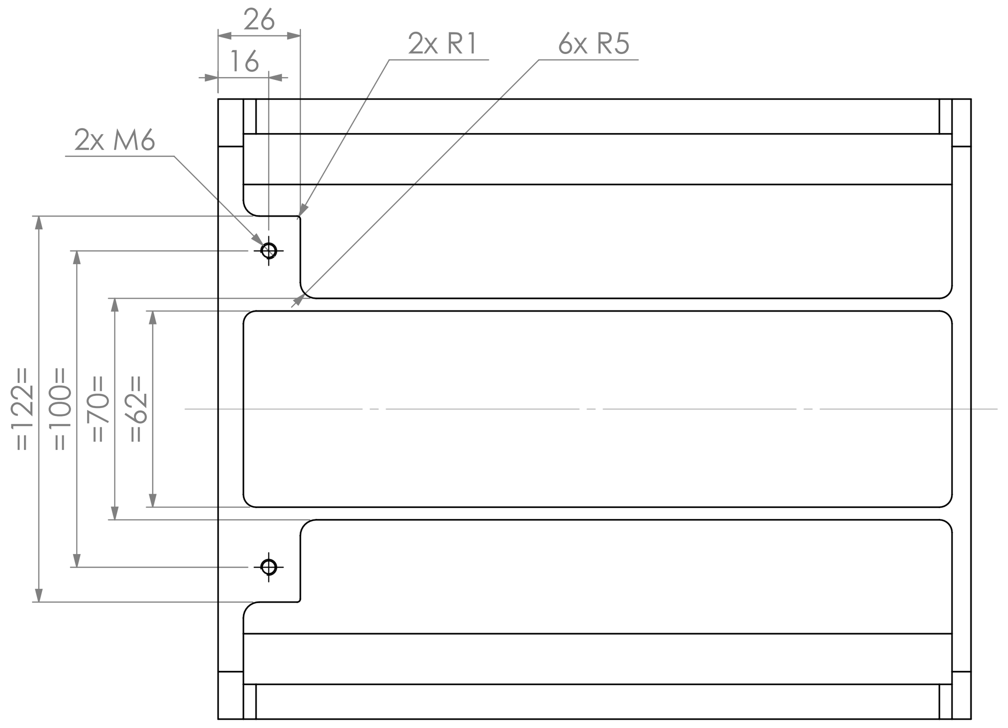

⌖	0.2	Holes position tolerance:

NOTES : REMOVE ALL BURRS AND SHARP EDGES

MOD	DATE	DRND.	APPD.	DESCRIPTION
A	27/10/19	Heyman		Moving 5 holes m6

MOD	DATE	DRND.	APPD.	DESCRIPTION

DESCRIPTION / REMARKS	MATERIAL	TREATMENT	W.(Kg)
	EN-AW 7075		2.73

SCALE: 1/ 2 (0mm – 200)

	NAME	DATE
DRN.	HEYMAN	04/10/2019
CKD.		
APPD.		

GEN. TOL. : ISO2768 fH

GEN. SURFACE FINISH : Ra 3,2

BEAMLINE GENERAL-DETECTORS
EIGER 2M VAC PSI
VESSEL

EUROPEAN SYNCHROTRON RADIATION FACILITY
CS 40220 - 38043 Grenoble Cedex 9
TEL. 04-76-88-20-00 WWW.ESRF.FR

A1

ASSY. 00.56.3110

00.56.3119 A

SolidWorks