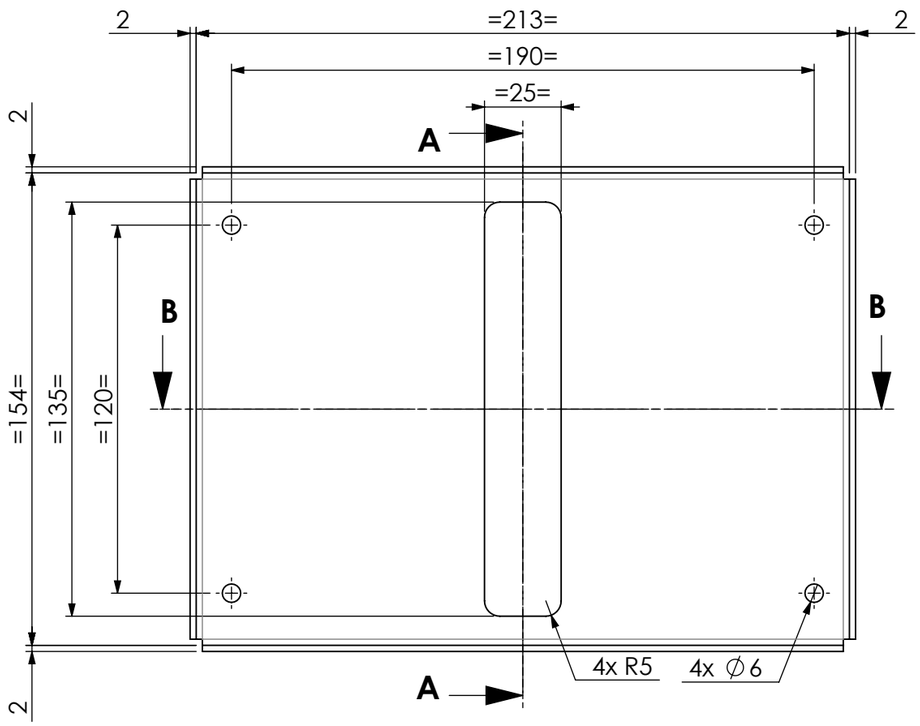

A-A

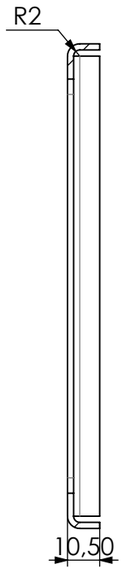

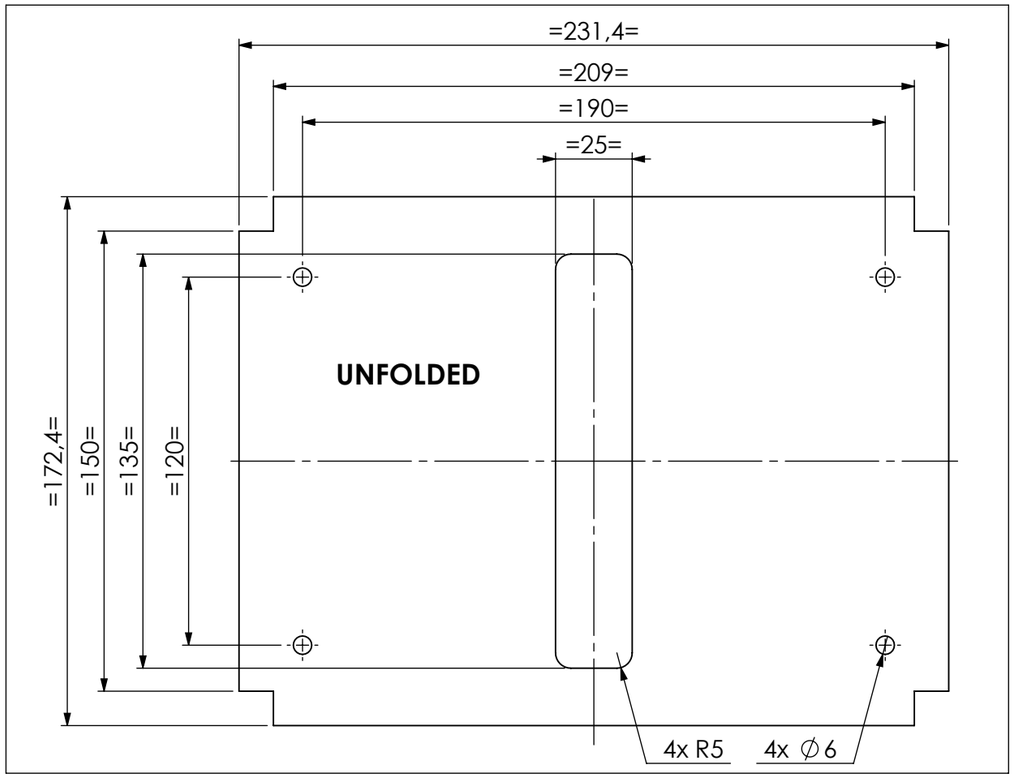

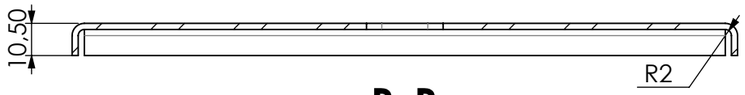

B-B

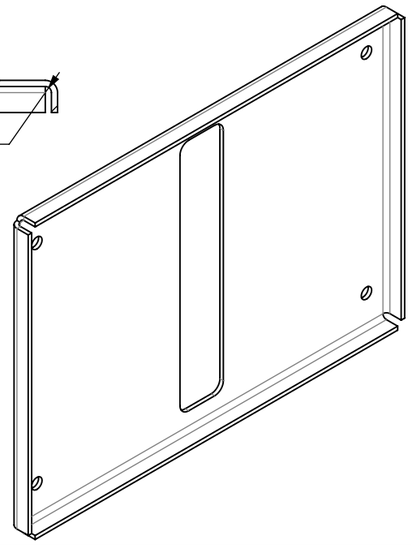

REMOVE ALL BURRS AND SHARP EDGES.

	INOX		0,425
DESCRIPTION / REMARKS	MATERIAL	TREATMENT	W.(Kg)

SCALE: 1/ 2

0mm 200

	NAME	DATE
DRN.	HEYMAN	24/10/22
CKD.		
APPD.		

GEN. TOL. : ISO2768 m K

GEN. SURFACE FINISH : Ra 3,2

MULTI-CAPILLARY REACTOR
REACTOR CAGE ASSY.
CAP

A3

Catherine Heyman Sas
5, place de Gordes
38000 Grenoble
Tel : 06.33.31.88.11
e-Mail : heyman@design-mecanique.fr

ASSY. CH.XM.0102

CH.XM.0103 -

MOD	DATE	DRND.	APPD.	DESCRIPTION

ESRF

SolidWorks