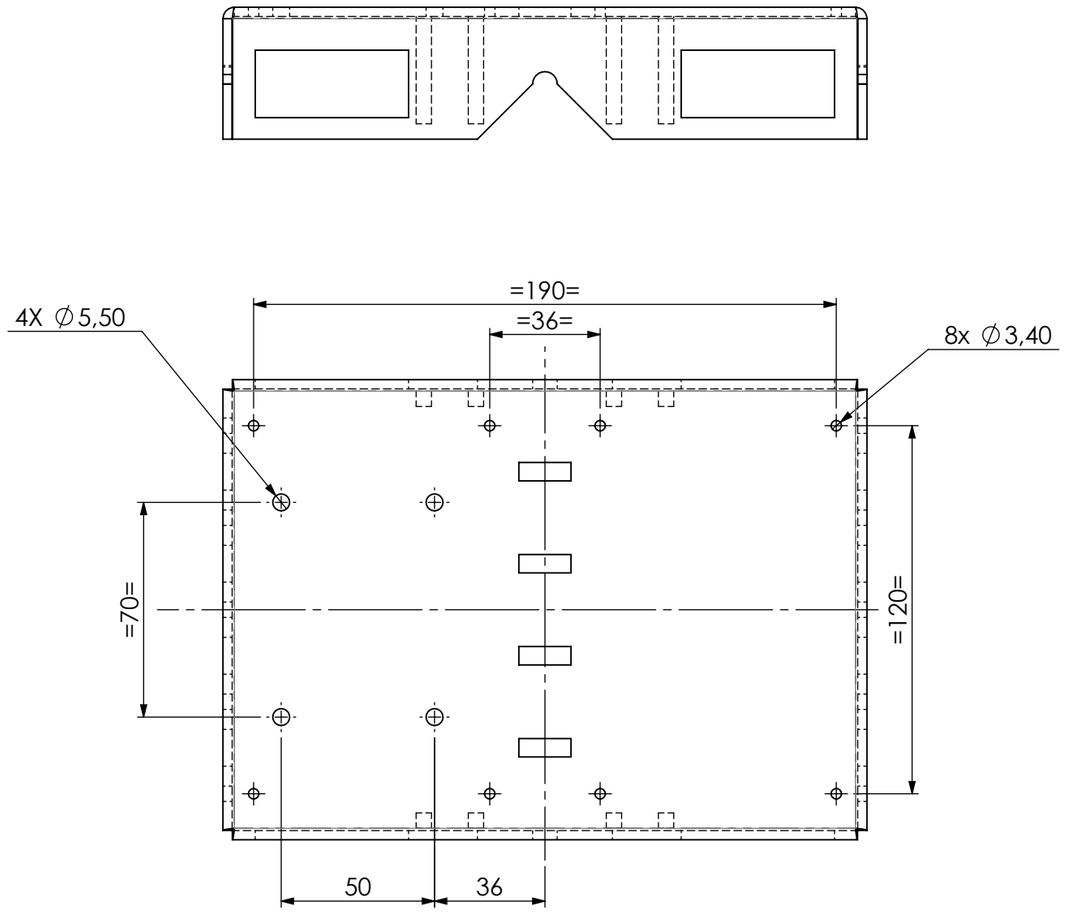

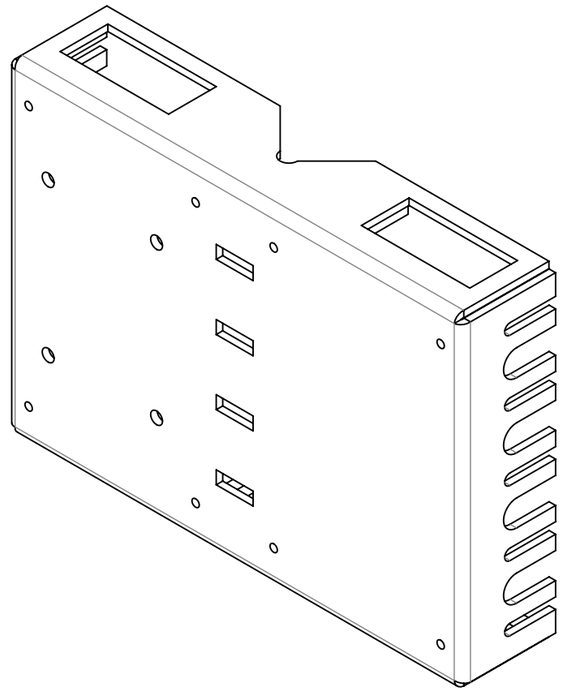

REMOVE ALL BURRS AND SHARP EDGES.

Modification:
Add 8 holes ∅3.40
Add 4 holes ∅5.50

A	23/11/22	HEYMAN		Symmetrical displacement of holes Ø5.5
MOD	DATE	DRND.	APPD.	DESCRIPTION

	AISI 304		1,24
DESCRIPTION / REMARKS	MATERIAL	TREATMENT	W.(Kg)

SCALE: 1/ 2
0mm 200

	NAME	DATE
DRN.	HEYMAN	24/10/22
CKD.		
APPD.		

GEN. TOL. : ISO2768 m K
GEN. SURFACE FINISH : Ra 3,2

MULTI-CAPILLARY REACTOR
REACTOR CAGE ASSY.
BOX

A3

Catherine Heyman Sas
5, place de Gordes
38000 Grenoble
Tel : 06.33.31.88.11
e-Mail : heyman@design-mecanique.fr

ASSY. CH.XM.0102

CH.XM.0104 A

ESRF

SolidWorks